Bulgaria, 8800 Sliven, 1,Sofiisko shosse str., PO Box: 273; phone: +359 44 666 207; phone/fax: + 359 44 62 22 91;
web site: www.dynamo-bg.com; email: dynamo@dynamo-bg.com;

MOTORS TYPE MP

The MP series of DC is intended for spindle drives of machine tools and is designed in accordance with up-to-date trends in the field of drive systems.

MAIN FEATURES:

- fully laminated frame;
- high insulation class F or H;
- forced cooling with degree of protection IP23;
- axial of radial cooling on customer's request;
- all mounting dimensions, cooling type, noise and vibrations are according to IEC recommendations;
- built-in posistor for over heat protection;
- built-in tachogenerator 0,02±1% or 0,004±1% V/min-1;
- rated power up to maximal speed.

The MP series covers a range of 112, 132, 160 and 225 mm in the height of the motor shaft.

The DC motors can be produced in different modification on customer's request:

- with respect to the mounting: horizontal or vertical;
- with respect to the rotation speed;
- with special requirements for noise and vibrations level.

TECHNICAL DATA

Motor type	Rated power	Rated speed	Max speed	Armature voltage	Armature current	Field voltage	Field current	Rotor inertia	Weight
	kW	min-1	min-1	V	A	V	A	$kg.m^2$	kg
MP112S	3.7	1000	5500	400	12.5	180	2.5	0.050	86
MP112SM	5.5	3000	3000	400	17.5	180	0.66	0.050	86
MP112SL	7.5	2200	3000	400	22	180	1.5	0.050	86
MP112M	5.5	1000	5500	400	17	180	3	0.066	98
MP112MA	13	2280	6000	400	38	180	2.5	0.066	98
MP112L	7.5	1000	5500	400	25	180	4.5	0.090	119
MP112LA	10	1500	5500	400	29	180	5	0.90	119
MP132S	5.5	1000	3500	400	18.5	180	2.5	0.90	135
MP132SA	5.5	1000	4500	400	19	180	2.48	0.090	135
MP132M	11	1000	3500	400	34	110	5.8	0.157	168
MP132MA	11	1000	4500	400	34	180	3.5	0.141	167
MP132MAX	11	1000	4500	400	34	180	3.65	0.141	167
MP132MDA	12	1500	4500	400	39	240	1.5	0.157	168
MP132MB	18.5	1500	4500	400	54	180	3.8	0.141	167

MP132MG1	18.5	1700	1700	400	55.7	180	2.9	0.141	167
MP132L	15	1000	3500	400	46	180	5	0.163	185
MP132LA	15	1000	4500	400	46	180	4.75	0.163	185
MP132LAX	15	1000	4500	400	46	180	4.75	0.163	185
MP132LCA	18	1500	2000	400	54	240	2.3	0.163	185
MP132LC	23	1750	4500	440	60	220	2.88	0.163	185
MP132MC	22	2800	2800	440	55.5	190	2.2	0.157	168
MP160M	22	1000	4500	400	64	180	6.5	0.410	268
MP160MGL	37	1700	1700	400	105	180	4.2	0.410	268
MP160L	30	1000	4000	400	89	180	6.8	0.456	298
MP160LX	30	1000	4000	400	89	180	6.8	0.456	298
MP160LM	45	2000	4000	400	125	180	4.0	0.456	298
MP160LC	45	2000	4500	400	125	180	3.6	0.456	298
MP225M	55	600	2500	400	165	180	8.5	1.840	735
MP225L	70	800	3000	400	200	180	9.65	2.100	764

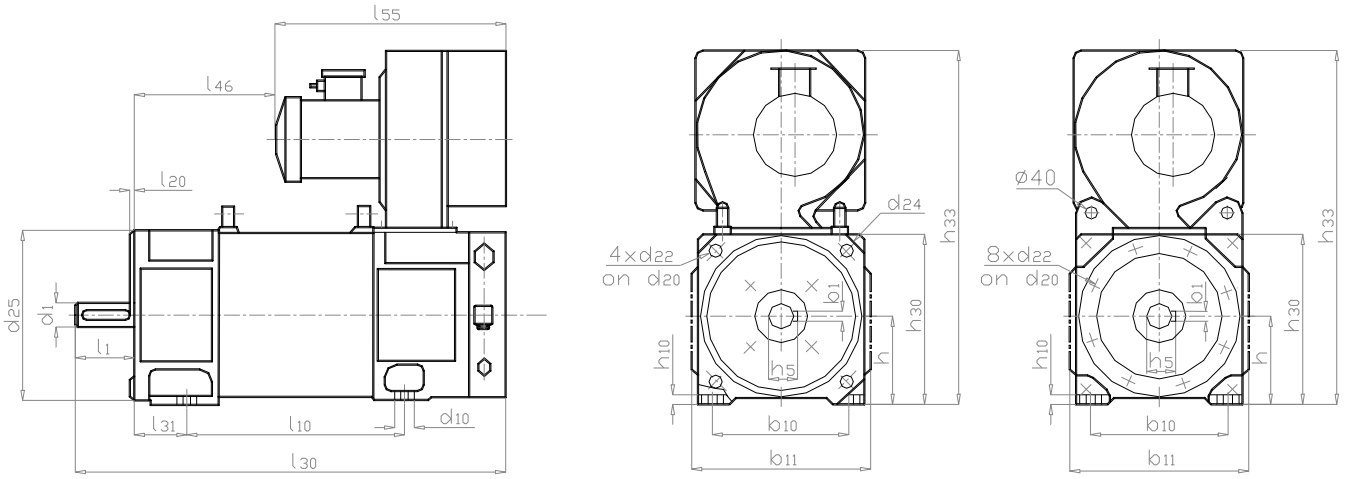

Type	Overall dimensions																			
	h	h_5	h_{10}	h_{30}	h_{33}	I_1	I_{10}	I_{20}	I_{30}	I_{31}	I_{45}	d_1	d_{10}	d_{20}	d_{22}	d_{24}	d_{25}	b_1	b_{10}	b_{11}
MP112S	112	35	11	227	472	80	250	4	545	70	103	32	12	215	15	250	180	10	190	234
MP112M	112	35	11	227	472	80	280	4	585	70	143	32	12	215	15	250	180	10	190	234
MP112L	112	35	11	227	472	80	355	4	650	70	208	32	12	215	15	250	180	10	190	234
MP132S	132	41	15	262	500	80	315	5	580	90	125	38	14	265	15	300	230	10	216	264
MP132M	132	41	15	262	500	80	435	5	700	89	245	38	14	265	15	300	230	10	216	264
MP132L	132	41	15	262	500	80	470	5	735	89	280	38	14	265	15	300	230	10	216	264
MP160M	160	51	14	317	655	80	400	5	815	108	268	48	15	350	19	400	300	14	254	332
MP160L	160	51	14	317	655	110	450	5	865	108	318	48	15	350	19	400	300	14	254	332
MP225M	225	74	20	445	760	140	670	5	1165	149	510	70	19	400	19	450	350	20	356	160
MP225L	225	74	20	445	760	140	670	5	1165	149	510	70	19	400	19	450	350	20	356	160

Produces: Automotive Alternators and Starters; DC electric Motors with permanent magnets and electric magnet excitation; Complete main drives of numerically controlled machine tools, for driving of machines, equipments, manipulators, automation and mechanization systems of technological processes; Portable boring and welding machine.